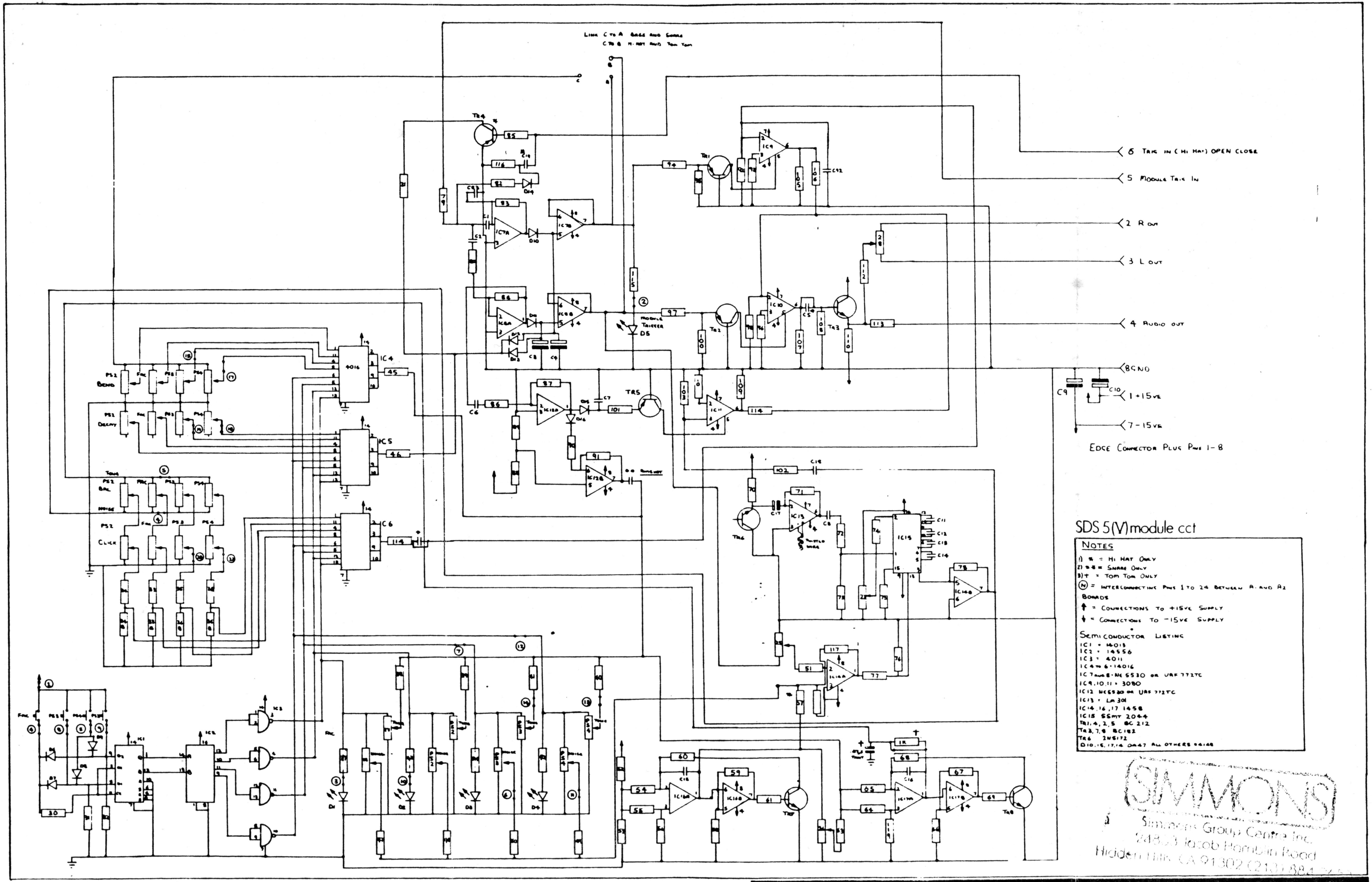
LINK C TO A BASS AND SNARE
C TO B HI HAT AND TOM TOM
C
B
A
6 TRIG IN (HI HAT) OPEN CLOSE
5 MODULE TRIG IN
2 R OUT
3 L OUT
4 AUDIO OUT
8 GND
1 +15VE
7 -15VE
EDGE CONNECTOR PLUS PINS 1-8
C9
C10
TR4
TR1
TR2
TR3
TR5
TR6
TR7
TR8
IC4
IC5
IC6
4016
IC7A
IC7B
IC8A
IC8B
IC9
IC10
IC11
IC12A
IC12B
IC13
IC14A
IC14B
IC15
IC16A
IC16B
IC17A
IC17B
IC1
IC2
IC3
MODULE TRIGGER D5
PS2 BEND
PS2 DECAY
TOM BAL
NOISE
PS2 CLICK
TWISTED WIRE
D1
D2
D3
D4

SDS 5(V) module cct

NOTES

1) * = HI HAT ONLY
2) ** = SNARE ONLY
3) † = TOM TOM ONLY
Ⓝ = INTERCONNECTING PINS 1 TO 24 BETWEEN A1 AND A2 BOARDS
↑ = CONNECTIONS TO +15VE SUPPLY
↓ = CONNECTIONS TO -15VE SUPPLY

SEMICONDUCTOR LISTING
IC1 = 14013
IC2 = 14556
IC3 = 4011
IC4 TO 6 = 14016
IC7 AND 8 = NE5530 OR UAF 772TC
IC9, 10, 11 = 3080
IC12 NE5530 OR UAF 772TC
IC13 = LM301
IC14, 16, 17 1458
IC15 SSM 2044
TR1, 4, 2, 5 BC212
TR3, 7, 8 BC182
TR6 2N5172
D10, 15, 17, 14 OA47 ALL OTHERS 1N4148

SIMMONS
Simmons Group Centre Inc
24823 Jacob Hamblin Road
Hidden Hills CA 91302 (213) 884

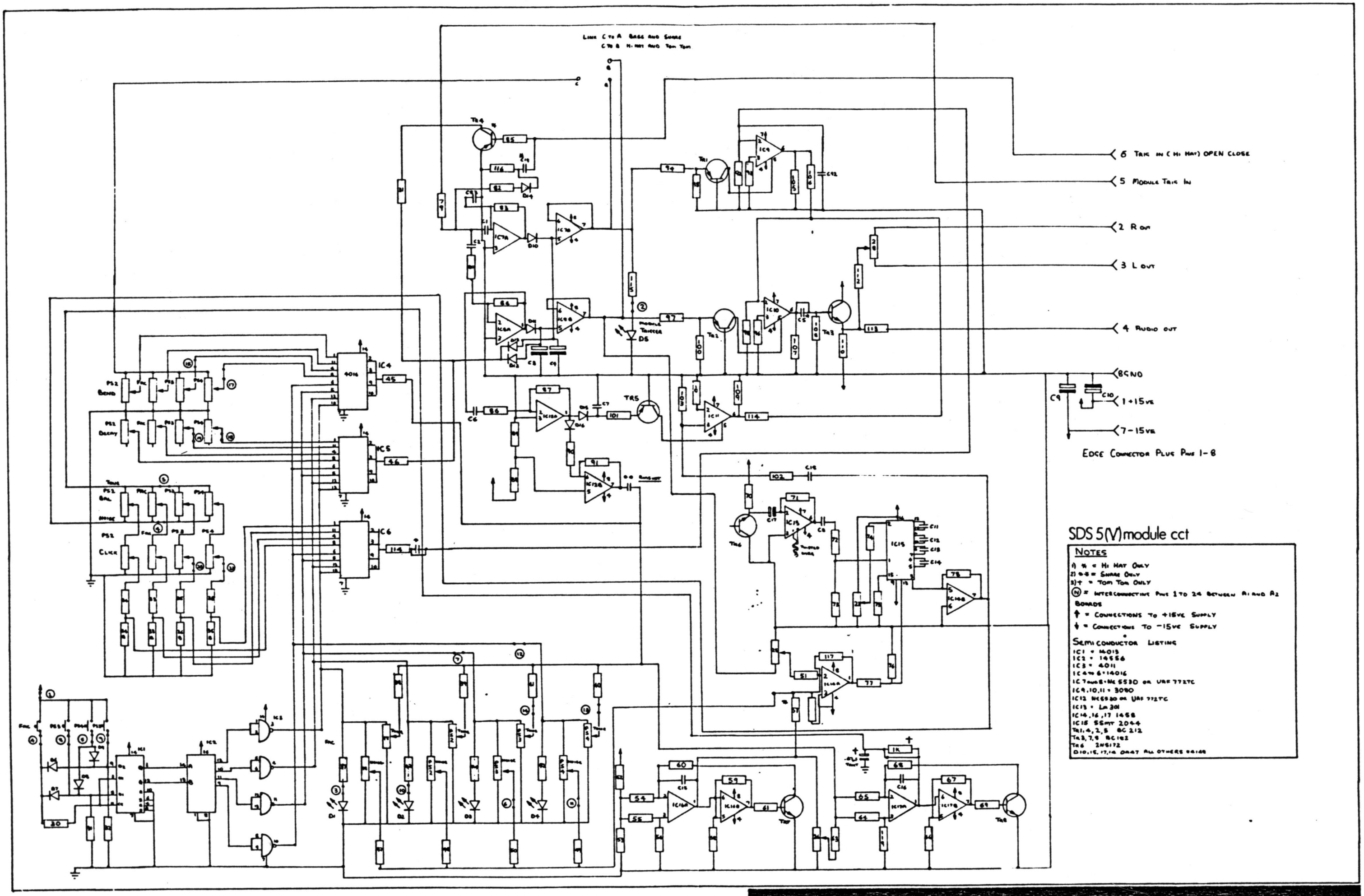
LINK C TO A BASS AND SNARE
C TO B HI HAT AND TOM TOM
6 TRIG IN (HI HAT) OPEN CLOSE
5 MODULE TRIG IN
2 R OUT
3 L OUT
4 AUDIO OUT
8 GND
1 +15VE
7 -15VE
EDGE CONNECTOR PLUG PINS 1-8
C9
C10
IC4
IC5
IC6
4016
IC7A
IC7B
IC8A
IC8B
IC9
IC10
IC11
IC12A
IC12B
IC13
IC15
IC16A
IC16B
IC17A
IC17B
IC1
IC2
IC3
TR1
TR2
TR3
TR4
TR5
TR6
TR7
TR8
D1
D2
D3
D4
D5
MODULE TRIGGER
BEND
DECAY
NOISE
CLICK
BAL
TONE
RIMSHOT

SDS 5(V) module cct

NOTES

1) * = HI HAT ONLY
2) ** = SNARE ONLY
3) † = TOM TOM ONLY
Ⓝ = INTERCONNECTING PINS 1 TO 24 BETWEEN A1 AND A2 BOARDS
↑ = CONNECTIONS TO +15VE SUPPLY
↓ = CONNECTIONS TO -15VE SUPPLY

SEMICONDUCTOR LISTING

IC1 = 14013
IC2 = 14556
IC3 = 4011
IC4 TO 6 = 14016
IC7 AND 8 = NE5530 OR UAF 772TC
IC9,10,11 = 3080
IC12 NE5530 OR UAF 772TC
IC13 = LM301
IC14,16,17 1458
IC15 SSM 2044
TR1,4,2,5 BC212
TR3,7,9 BC182
TR6 2N5172
D10,15,17,14 OA47 ALL OTHERS 1N4148

SIMMONS ELECTRONIC DRUMS
abbey mill, abbey mill lane, st. albans, hertfordshire al3 4hg.
telephone 0727 54601 telex 8952387 answer g/simmons

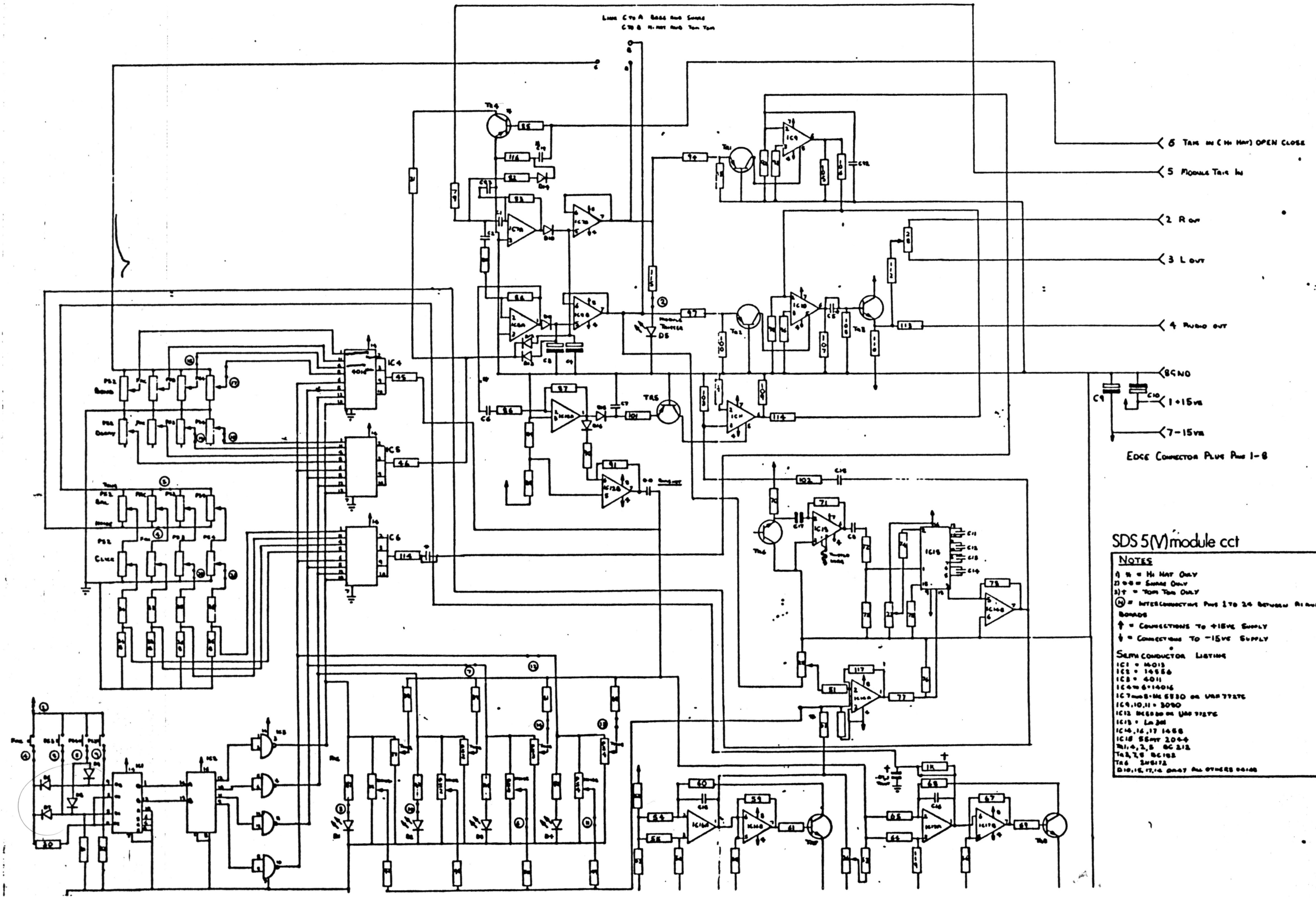
Link C to A Bass and Snare
C to B Hi Hat and Tom Tom
6 Trig in (Hi Hat) OPEN CLOSE
5 Module Trig In
2 R out
3 L out
4 Audio out
8 GND
1 +15ve
7 -15ve
Edge Connector Plug Pins 1-8
TR4
TR1
TR2
TR3
TR5
TR6
IC4
IC5
IC6
IC7a
IC7b
IC8a
IC8b
IC9
IC10
IC11
IC12a
IC12b
IC13
IC15
IC14a
IC14b
IC16a
IC16b
IC17a
IC17b
IC1
IC2
IC3
D5
Module Trigger
C9
C10
PS2 Bend
PS2 Decay
PS2 Bal
Noise
PS2 Click
Tone

SDS 5(V) module cct

Notes

1) ✱ = Hi Hat Only
2) ✱✱ = Snare Only
3) † = Tom Tom Only
Ⓝ = Interconnecting Pins 1 to 24 between A1 and A2 Boards
↑ = Connections to +15ve Supply
↓ = Connections to −15ve Supply

Semiconductor Listing

IC1 = 14013
IC2 = 14556
IC3 = 4011
IC4 to 6 = 14016
IC7 and 8 = MC 5530 or UAF 772TC
IC9,10,11 = 3080
IC12 MC5530 or UAF 772TC
IC13 = LM 381
IC14,16,17 1458
IC18 SSMT 2044
TR1,4,2,5 BC 212
TR3,7,8 BC182
TR6 2N5172
D10,15,17,14 OA47 All others 1N4148

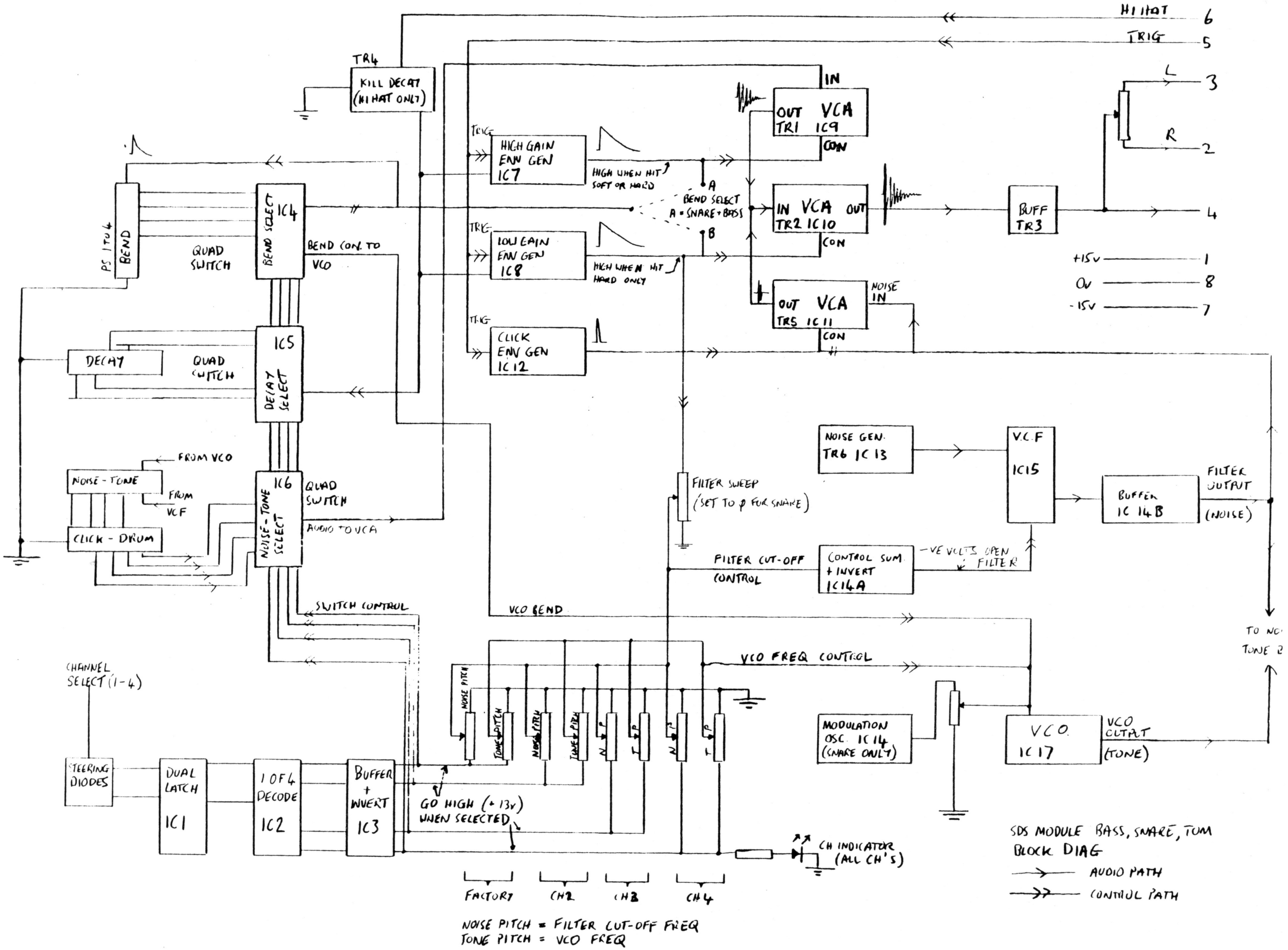
HI HAT 6
TRIG 5
TR4
KILL DECAY (HI HAT ONLY)
IN
OUT VCA TR1 IC9
CON
L 3
R 2
TRIG
HIGH GAIN ENV GEN IC7
HIGH WHEN HIT SOFT OR HARD
A
BEND SELECT A = SNARE + BASS
B
P5 1 TO 4 BEND
QUAD SWITCH
BEND SELECT IC4
BEND CON. TO VCO
TRIG
LOW GAIN ENV GEN IC8
HIGH WHEN HIT HARD ONLY
IN VCA OUT TR2 IC10
CON
BUFF TR3
4
+15v 1
0v 8
-15v 7
NOISE IN
OUT VCA TR5 IC11
CON
TRIG
CLICK ENV GEN IC12
DECAY
QUAD SWITCH
IC5
DECAY SELECT
FROM VCO
NOISE - TONE
FROM VCF
IC6
QUAD SWITCH
NOISE - TONE SELECT
AUDIO TO VCA
CLICK - DRUM
NOISE GEN. TR6 IC13
V.C.F IC15
FILTER SWEEP (SET TO 0 FOR SNARE)
BUFFER IC 14B
FILTER OUTPUT (NOISE)
FILTER CUT-OFF CONTROL
CONTROL SUM + INVERT IC14A
-VE VOLTS OPEN FILTER
SWITCH CONTROL
VCO BEND
TO NOISE TONE 2
VCO FREQ CONTROL
CHANNEL SELECT (1-4)
NOISE PITCH
TONE PITCH
NOISE PITCH
TONE PITCH
N P
T P
N P
T P
MODULATION OSC. IC14 (SNARE ONLY)
VCO IC17
VCO OUTPUT (TONE)
STEERING DIODES
DUAL LATCH IC1
1 OF 4 DECODE IC2
BUFFER + INVERT IC3
GO HIGH (+13v) WHEN SELECTED
CH INDICATOR (ALL CH'S)
FACTORY
CH2
CH3
CH4
AUDIO PATH
CONTROL PATH

SDS MODULE BASS, SNARE, TOM
BLOCK DIAG

NOISE PITCH = FILTER CUT-OFF FREQ
TONE PITCH = VCO FREQ

SIMMONS
Simmons Group Centre Inc.
24833 Jacob Hamblin Road
Hidden Hills, CA 91302 (213) 884-2653

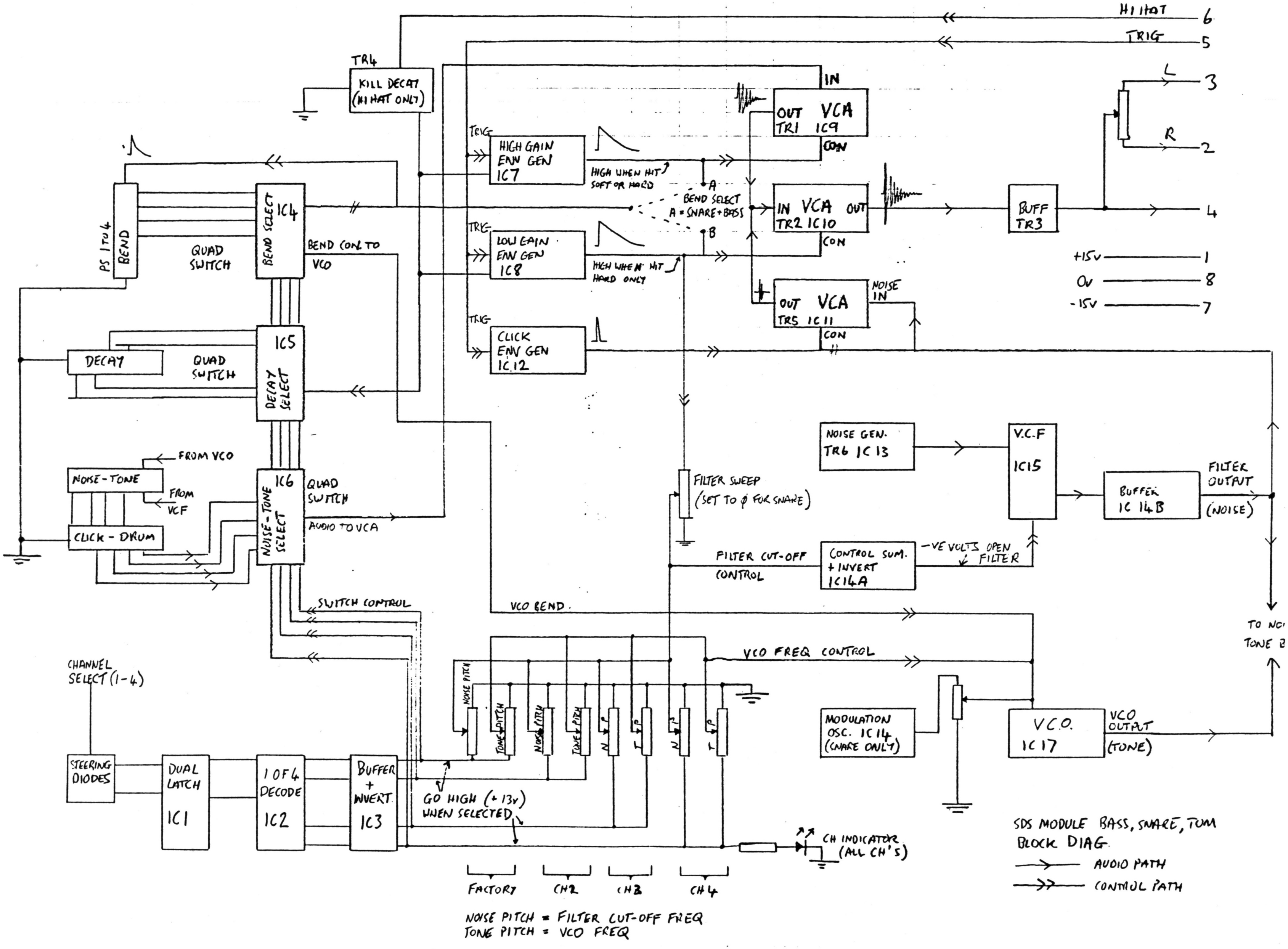
HI HAT
6
TRIG
5
TR4
KILL DECAY (HI HAT ONLY)
L
3
R
2
IN
OUT VCA TR1 IC9
CON
TRIG
HIGH GAIN ENV GEN IC7
HIGH WHEN HIT SOFT OR HARD
A
BEND SELECT A = SNARE + BASS
B
IN VCA OUT TR2 IC10
CON
BUFF TR3
4
PS 1 TO 4 BEND
BEND SELECT IC4
QUAD SWITCH
BEND CON. TO VCO
TRIG
LOW GAIN ENV GEN IC8
HIGH WHEN HIT HARD ONLY
+15v
1
0v
8
-15v
7
OUT VCA TR5 IC11
NOISE IN
CON
TRIG
CLICK ENV GEN IC12
IC5
DECAY
QUAD SWITCH
DECAY SELECT
NOISE GEN. TR6 IC13
V.C.F IC15
FROM VCO
NOISE-TONE
FROM VCF
IC6
NOISE-TONE SELECT
QUAD SWITCH
AUDIO TO VCA
FILTER SWEEP (SET TO 0 FOR SNARE)
BUFFER IC 14B
FILTER OUTPUT (NOISE)
CLICK - DRUM
FILTER CUT-OFF CONTROL
CONTROL SUM. + INVERT IC14A
-VE VOLTS OPEN FILTER
SWITCH CONTROL
VCO BEND.
TO NOI
TONE
VCO FREQ CONTROL
CHANNEL SELECT (1-4)
NOISE PITCH
TONE PITCH
NOISE PITCH
TONE PITCH
N P
T P
N P
T P
MODULATION OSC. IC14 (SNARE ONLY)
V.C.O. IC17
VCO OUTPUT (TONE)
STEERING DIODES
DUAL LATCH IC1
1 OF 4 DECODE IC2
BUFFER + INVERT IC3
GO HIGH (+13v) WHEN SELECTED
CH INDICATOR (ALL CH'S)
FACTORY
CH2
CH3
CH4

NOISE PITCH = FILTER CUT-OFF FREQ
TONE PITCH = VCO FREQ

SDS MODULE BASS, SNARE, TOM
BLOCK DIAG

→ AUDIO PATH
→→ CONTROL PATH

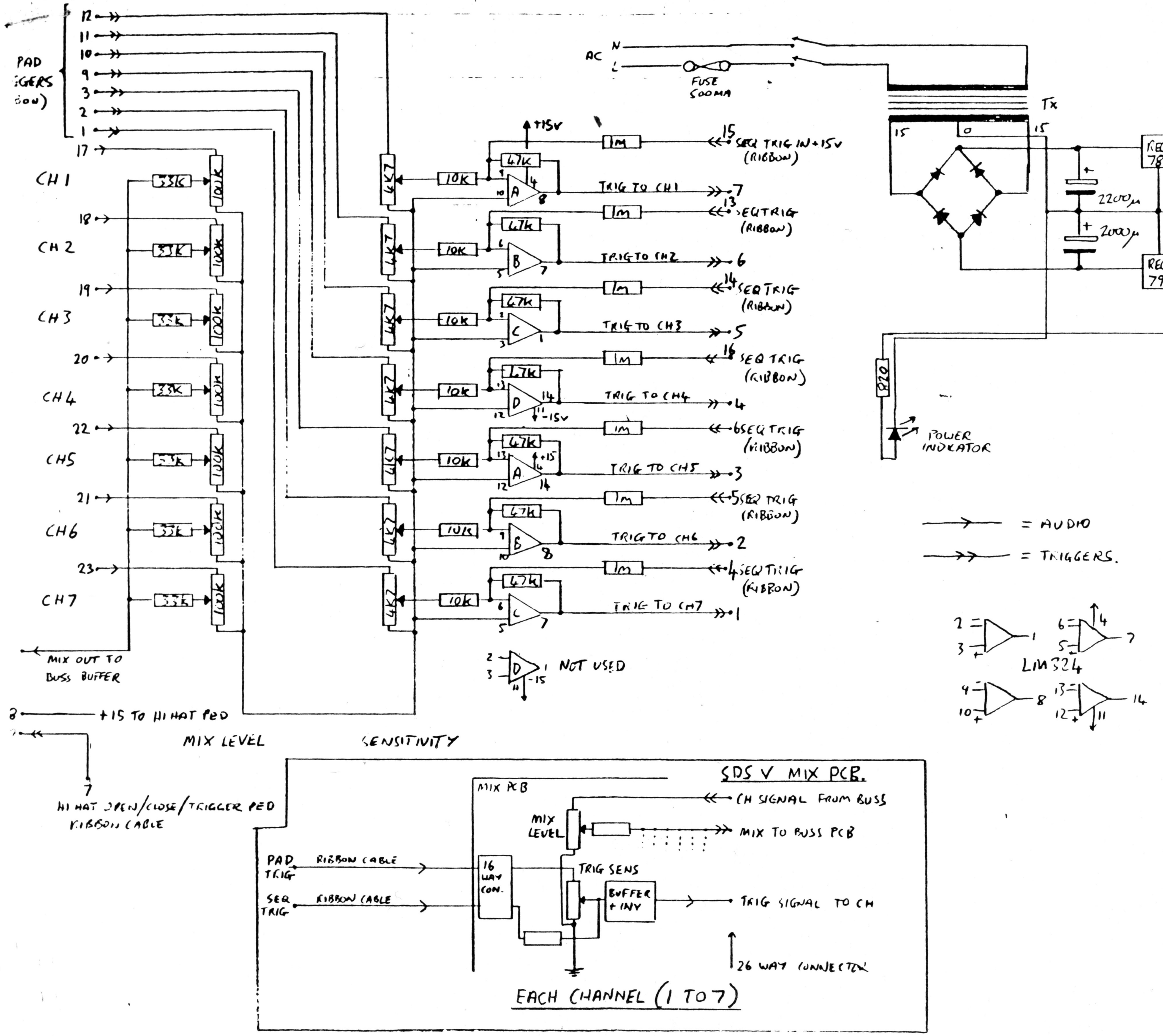
PAD
IGGERS
(RIBBON)
12
11
10
9
3
2
1
17
18
19
20
22
21
23
CH 1
CH 2
CH 3
CH 4
CH 5
CH 6
CH 7
33K
100K
4K7
10K
47K
1M
+15V
-15V
A
B
C
D
SEQ TRIG IN +15V (RIBBON)
SEQ TRIG (RIBBON)
TRIG TO CH1
TRIG TO CH2
TRIG TO CH3
TRIG TO CH4
TRIG TO CH5
TRIG TO CH6
TRIG TO CH7
NOT USED
MIX OUT TO BUSS BUFFER
+15 TO HI HAT PED
HI HAT OPEN/CLOSE/TRIGGER PED RIBBON CABLE
MIX LEVEL
SENSITIVITY
AC
N
L
FUSE 500MA
Tx
15
0
15
2200µ
2200µ
REG 78
REG 79
·1µ
·1µ
4µ7
+15V
GND
-15V
820
POWER INDICATOR
= AUDIO
= TRIGGERS.
LM324
SDS V MIX PCB.
MIX PCB
CH SIGNAL FROM BUSS
MIX LEVEL
MIX TO BUSS PCB
TRIG SENS
PAD TRIG
SEQ TRIG
RIBBON CABLE
RIBBON CABLE
16 WAY CON.
BUFFER + INV
TRIG SIGNAL TO CH
26 WAY CONNECTOR
EACH CHANNEL (1 TO 7)

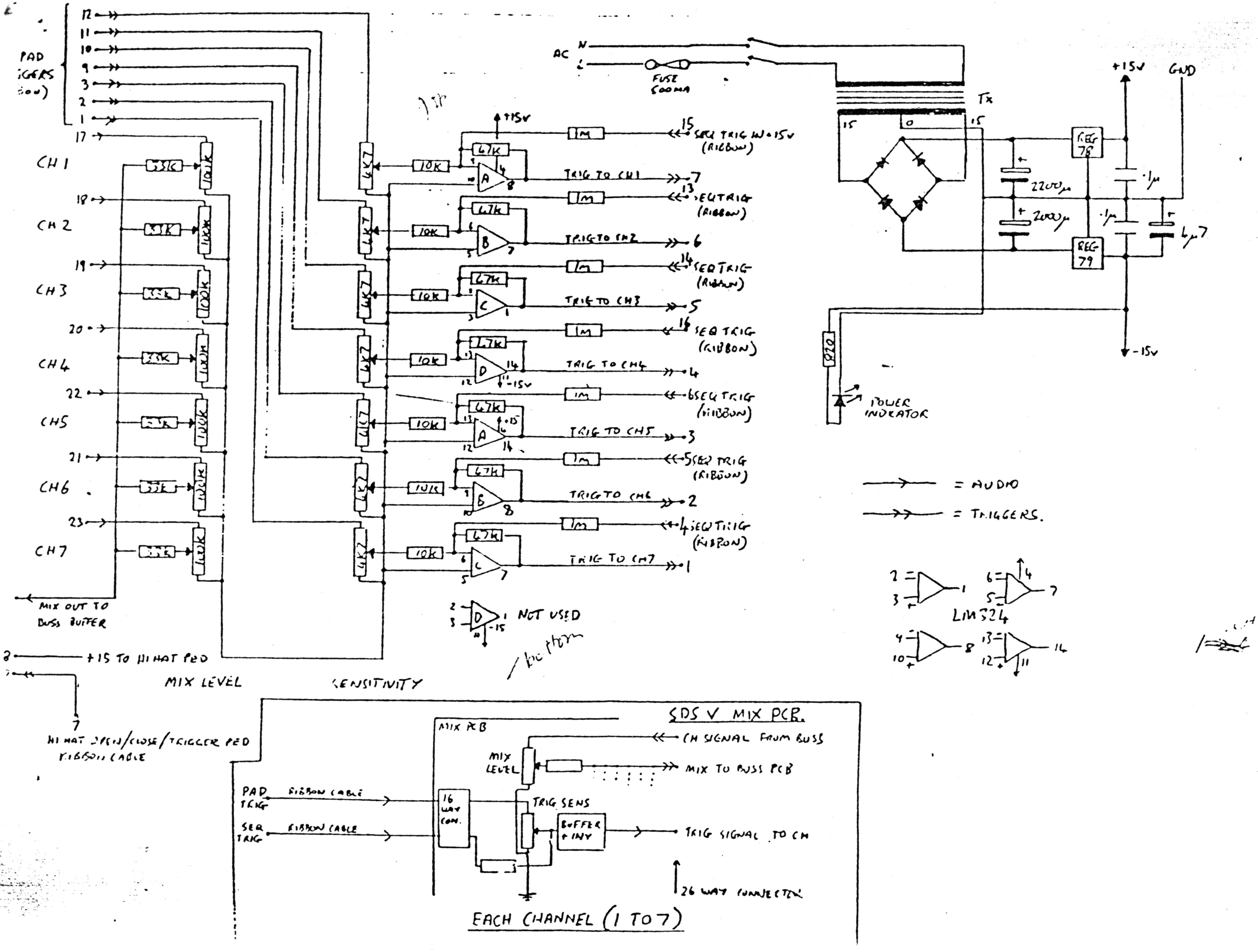
PAD
IGERS
ON)
12
11
10
9
3
2
1
17
18
19
20
22
21
23
CH 1
CH 2
CH 3
CH 4
CH5
CH6
CH7
33K
100K
4K7
10K
47K
1M
+15V
A
B
C
D
SEQ TRIG IN +15V (RIBBON)
SEQ TRIG (RIBBON)
TRIG TO CH1
TRIG TO CH2
TRIG TO CH3
TRIG TO CH4
TRIG TO CH5
TRIG TO CH6
TRIG TO CH7
-15V
MIX OUT TO BUSS BUFFER
+15 TO HI HAT PED
HI HAT OPEN/CLOSE/TRIGGER PED RIBBON CABLE
MIX LEVEL
SENSITIVITY
NOT USED
bottom
AC
N
L
FUSE 500MA
Tx
15
0
15
2200µ
2200µ
REG 78
REG 79
+15V
GND
·1µ
·1µ
4µ7
-15V
820
POWER INDICATOR
= AUDIO
= TRIGGERS.
LM324
SDS V MIX PCB.
MIX PCB
CH SIGNAL FROM BUSS
MIX LEVEL
MIX TO BUSS PCB
PAD TRIG
SEQ TRIG
RIBBON CABLE
RIBBON CABLE
16 WAY CON.
TRIG SENS
BUFFER + INV
TRIG SIGNAL TO CH
26 WAY CONNECTOR
EACH CHANNEL (1 TO 7)

SDS V BUSS PCB
+ BACK PANEL WIRING

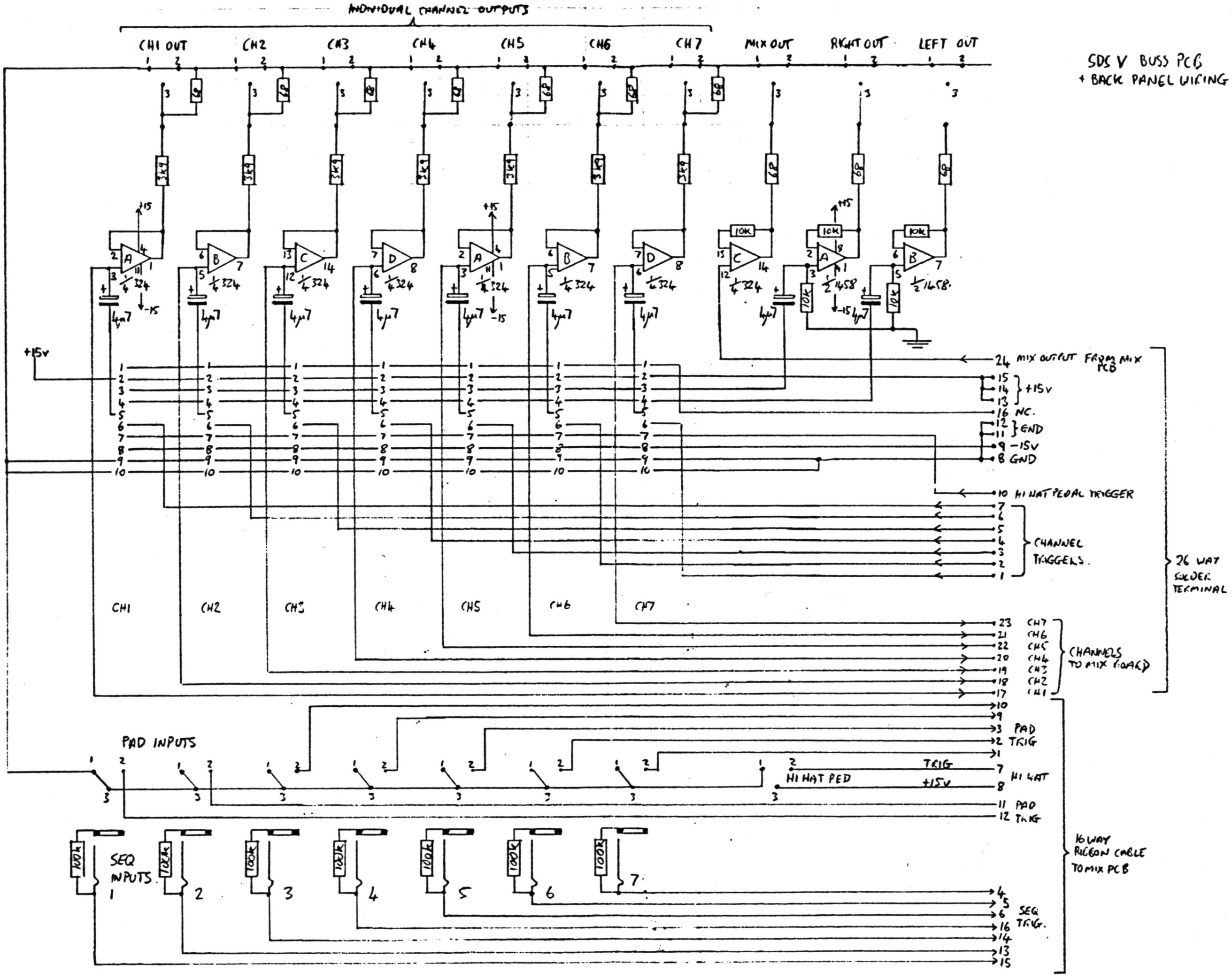
INDIVIDUAL CHANNEL OUTPUTS
CH1 OUT
CH2
CH3
CH4
CH5
CH6
CH7
MIX OUT
RIGHT OUT
LEFT OUT
1
2
3
68
3K9
10K
+15
-15
A
B
C
D
1/4 324
1/2 1458
4μ7
+15v
24 MIX OUTPUT FROM MIX PCB
15
14
13
} +15v
16 NC.
12
11
} GND
9 -15v
8 GND
10 HI HAT PEDAL TRIGGER
7
6
5
4
3
2
1
CHANNEL TRIGGERS.
26 WAY SOLDER TERMINAL
CH1
CH2
CH3
CH4
CH5
CH6
CH7
23 CH7
21 CH6
22 CH5
20 CH4
19 CH3
18 CH2
17 CH1
CHANNELS TO MIX BOARD
PAD INPUTS
10
9
3 PAD
2 TRIG
1
TRIG
7 HI HAT
HI HAT PED
+15v
8
11 PAD
12 TRIG
16 WAY RIBBON CABLE TO MIX PCB
100k
SEQ INPUTS
1
2
3
4
5
6
7
4
5
6
16
14
13
15
SEQ TRIG.

SIMMONS
SIMMONS GROUP CENTRE INC.
5115 DOUGLAS FIR ROAD, UNIT B
CALABASAS, CA 91302 (213) 884-2653

CYMBAL + HI HAT.

CIRCUIT ESSENTIALLY THE SAME AS DRUMS. EXCEPT:-

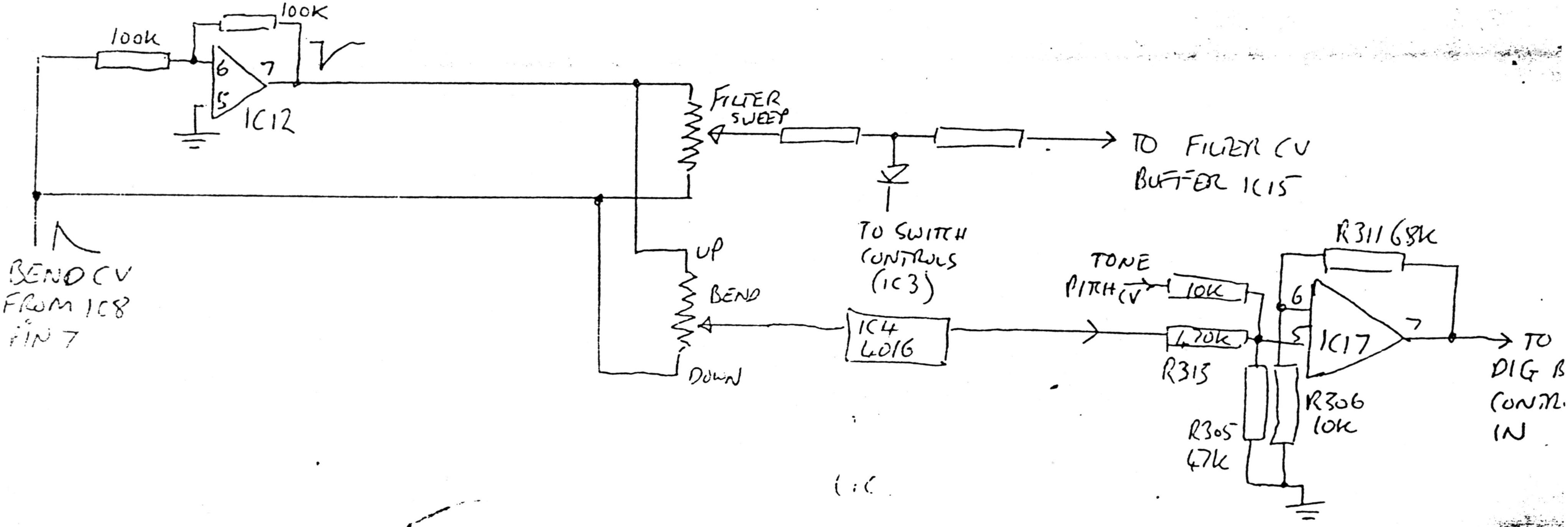
100k
100K
6
7
5
IC12
FILTER SWEEP
TO FILTER CV BUFFER IC15
TO SWITCH CONTROLS (IC3)
BEND CV FROM IC8 PIN 7
UP
BEND
DOWN
IC4 4016
TONE PITCH CV
10K
470K
R313
R311 68K
6
5
IC17
7
TO DIG B
CONTR.
IN
R305 47K
R306 10K

TEST

SDS V BUSS PCB
+ BACK PANEL WIRING

SIMMONS

Simmons Group Centre Inc.
24833 Jacob Hamblin Road
Hidden Hills, CA 91302 (213) 884-2653

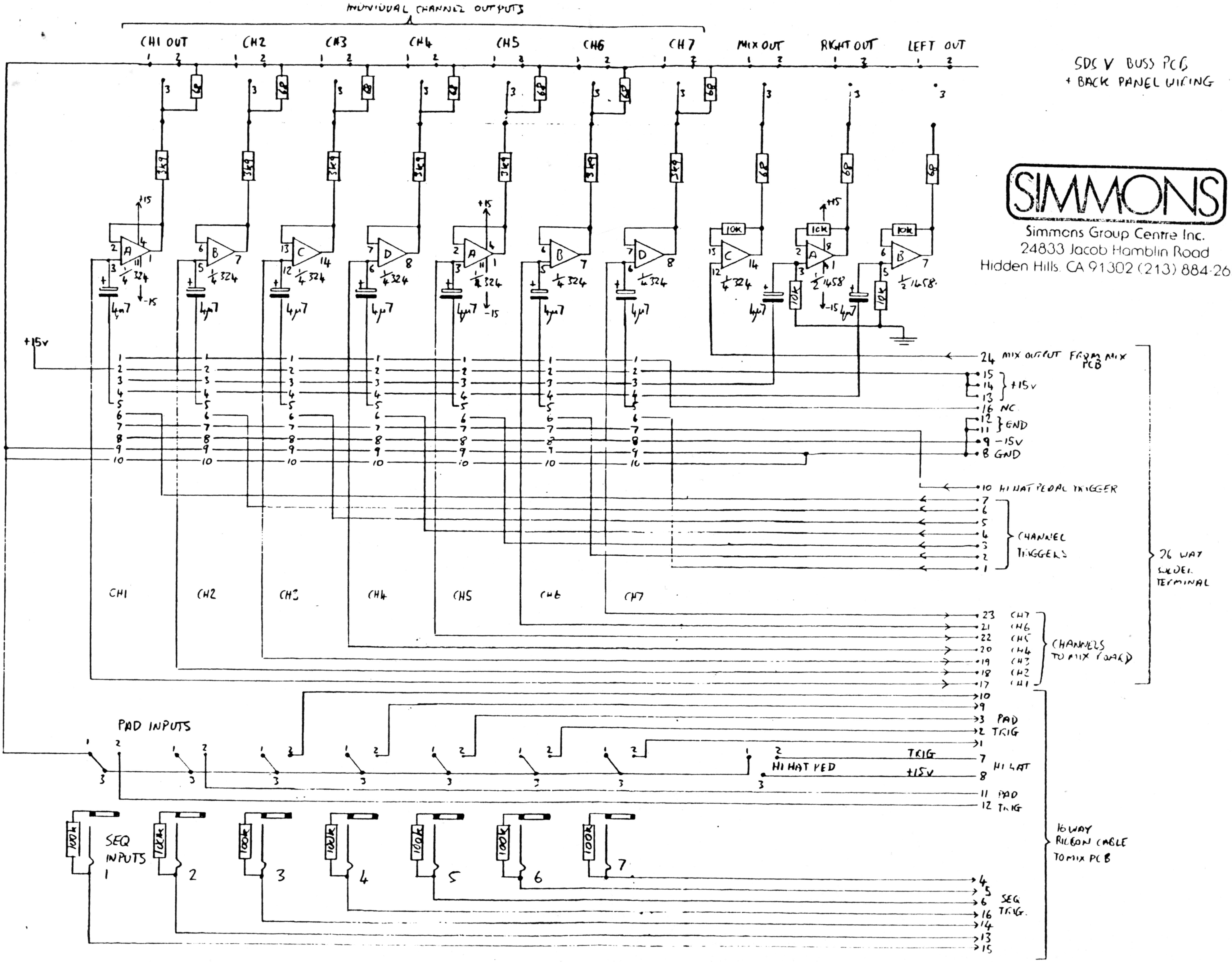

INDIVIDUAL CHANNEL OUTPUTS
CH1 OUT
CH2
CH3
CH4
CH5
CH6
CH7
MIX OUT
RIGHT OUT
LEFT OUT
1
2
3
6R
3K9
10K
+15
-15
A
B
C
D
1/4 324
1/2 1458
4µ7
+15V
24 MIX OUTPUT FROM MIX PCB
15
14
13
+15V
16 NC
12
11
GND
9 -15V
8 GND
10 HI HAT PEDAL TRIGGER
7
6
5
4
3
2
1
CHANNEL TRIGGERS
26 WAY SOLDER TERMINAL
CH1
CH2
CH3
CH4
CH5
CH6
CH7
23 CH7
21 CH6
22 CH5
20 CH4
19 CH3
18 CH2
17 CH1
CHANNELS TO MIX BOARD
PAD INPUTS
10
9
3 PAD
2 TRIG
1
TRIG
7
HI HAT
HI HAT PED
+15V
8
11 PAD
12 TRIG
SEQ INPUTS
100K
1
2
3
4
5
6
7
4
5
6 SEQ
16 TRIG.
14
13
15
16 WAY RIBBON CABLE TO MIX PCB